Lecture 7

Converter Control

Arvind Balachandran

FS/ISY



LINKÖPING UNIVERSITY

Outline

- Phase Locked Loop
- Coordinate transforms
    - abc-frame
    - αβ-frame
    - DQ-frame
- Vector control
- PV with MPPT + Grid inverter

Grid Power Infeed - synchronous generators

Active power $P_R = \frac{V_S V_R}{X} \sin \delta$

Reactive power $Q_R = \frac{V_S V_R}{X} \cos \delta - \frac{V_R^2}{X}$

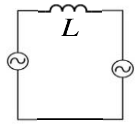

General idea: power flow through an inductor, inductor represents a transformer or a filter.

- Generator is (physically) synchronized to the grid.
  - Generator speed = grid frequency.
- Active and reactive power flow controlled by generator torque and field excitation.

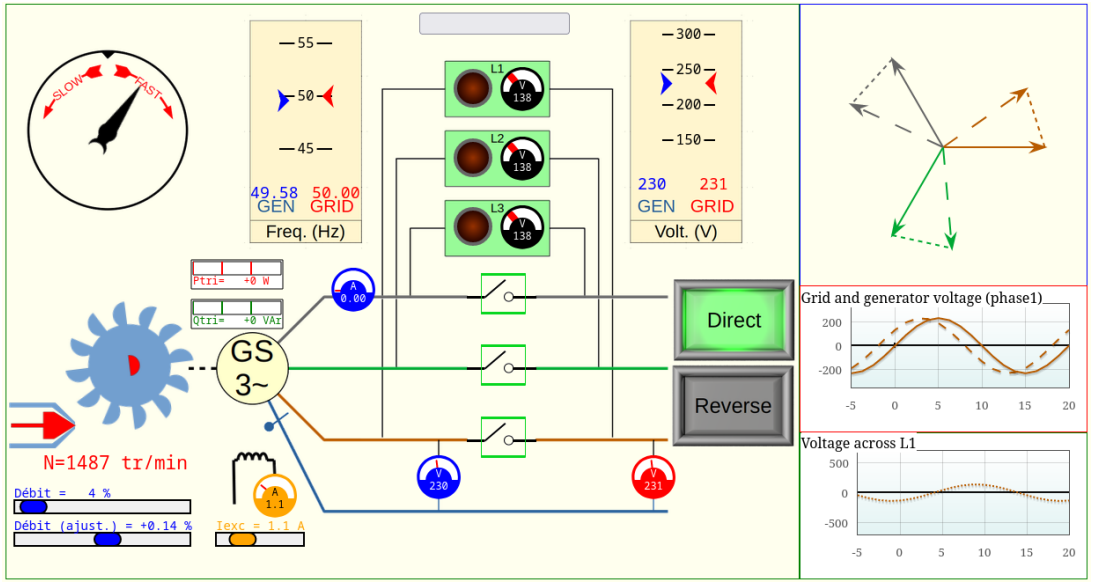

https://perso.univ-lyon1.fr/charles.joubert/web_anim/simen_Pelton_couplee_1.html a fun tool to understand how to control power flow in synchronous machines

Grid Power Infeed - Renewables

Active power $P_R = \frac{V_S V_R}{X} \sin \delta$

Reactive power $Q_R = \frac{V_S V_R}{X} \cos \delta - \frac{V_R^2}{X}$

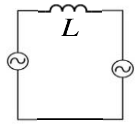

General idea: power flow through an inductor, inductor represents a transformer or a filter.

- (No physical) synchronization to the grid.
- Converter infeed of $P+jQ$ through control of $\overline{U_v} = U_v \angle \delta$, where δ is the angle difference to the grid voltage $\overline{U_g}$.

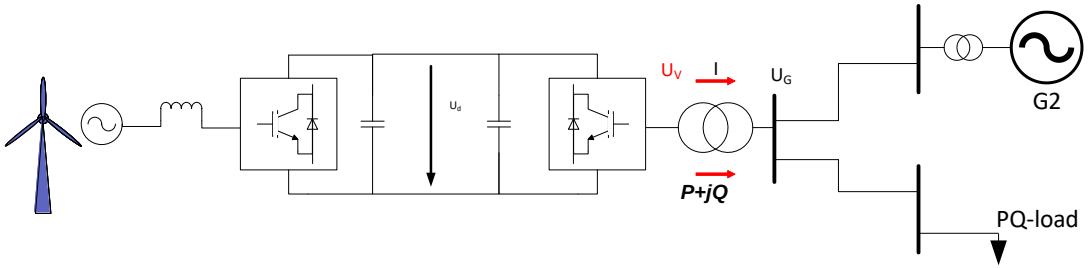

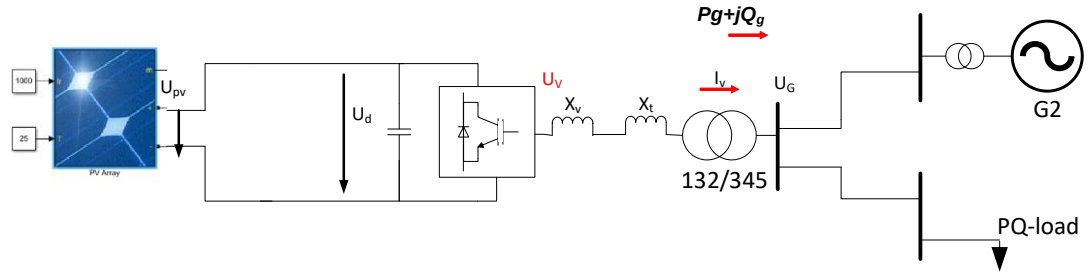

Phase synchronization

Phase Lock Loop (PLL)

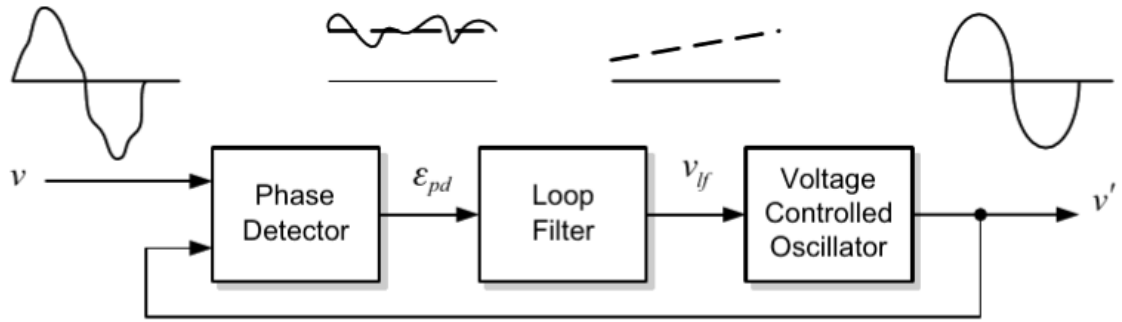

Figure 4.4 Basic structure of a PLL

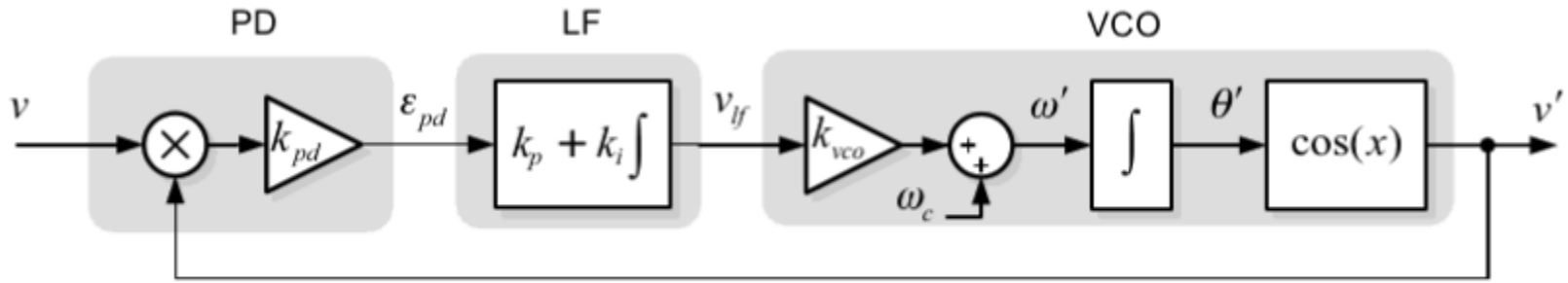

Figure 4.5 Block diagram of an elementary PLL

The main idea

$v = \hat{v} \sin \omega t \, , v' = \hat{v} \sin \omega t - \varphi$

$\varepsilon_{pd} = v \cdot v'$

$= \frac{1}{2}(\cos \varphi + \cos(2\omega t - \varphi))$

PI or PID controller to make $\varphi \to \pi/2$.

This results in $v' = \hat{v} \cos \omega t$

Outline

- Phase Locked Loop ☑
- Coordinate transforms
    - abc-frame
    - αβ-frame
    - DQ-frame
- Vector control
- PV with MPPT + Grid inverter

Grid Power Infeed - VSCs

Active power $P_R = \frac{V_S V_R}{X} \sin \delta$

Reactive power $Q_R = \frac{V_S V_R}{X} \cos \delta - \frac{V_R^2}{X}$

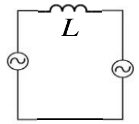

General idea: power flow through an inductor, inductor represents a transformer or a filter.

- (No physical) synchronization to the grid.
- Converter infeed of $P+jQ$ through control of $\overline{U_v} = U_v \angle \delta$, where δ is the angle difference to the grid voltage $\overline{U_g}$.

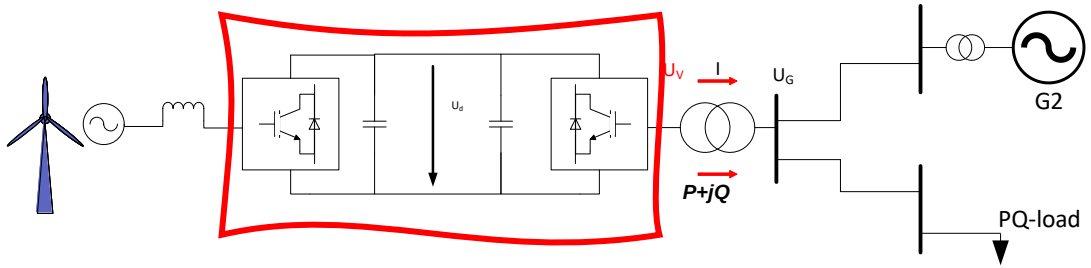

Voltage Source Converters (VSC)

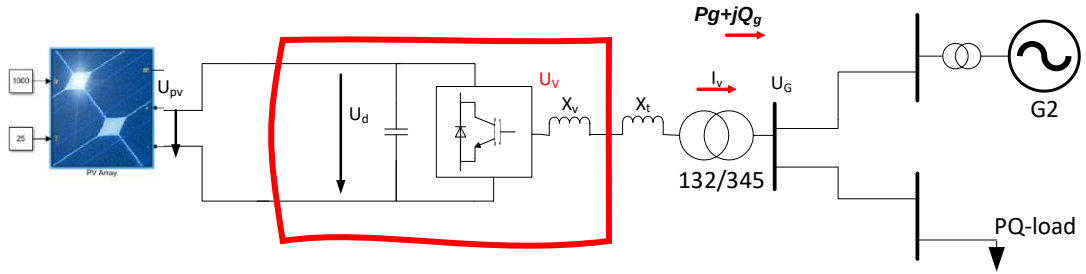

https://perso.univ-lyon1.fr/charles.joubert/web_anim/simen_Pelton_couplee_1.html a fun tool to understand how to control power flow in synchronous machines

Voltage Source Converters

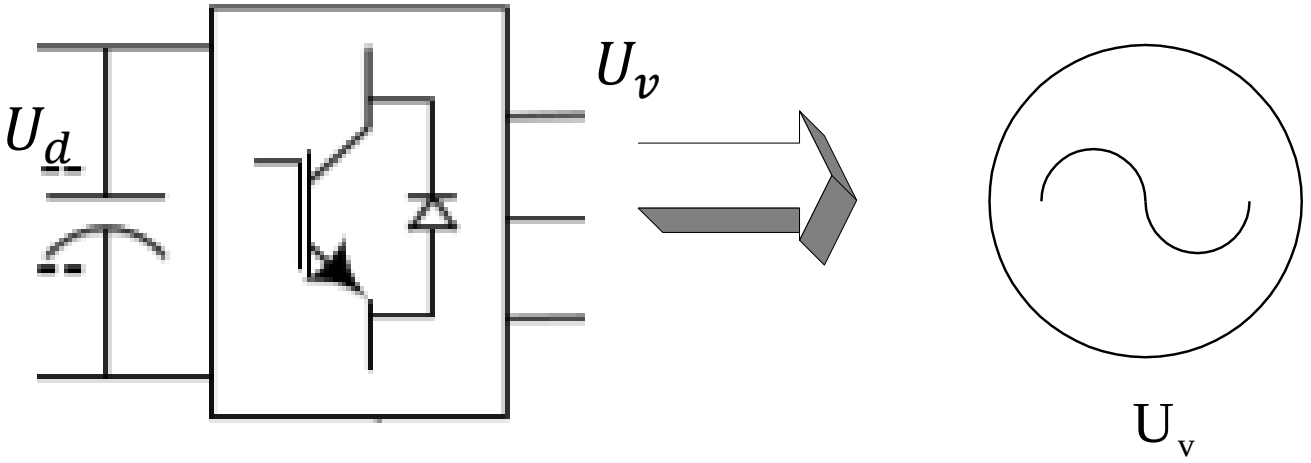

VSCs are Power converters

- DC to AC
- DC to DC to AC
- AC to DC to AC

*More details: TSTE28 course.

adjustable

- amplitude
- phase angle
- frequency

VSCs are modelled as ideal AC voltage sources with a gain and controllable amplitude, phase angle, and frequency

Power Flow Control – VSC (abc frame)

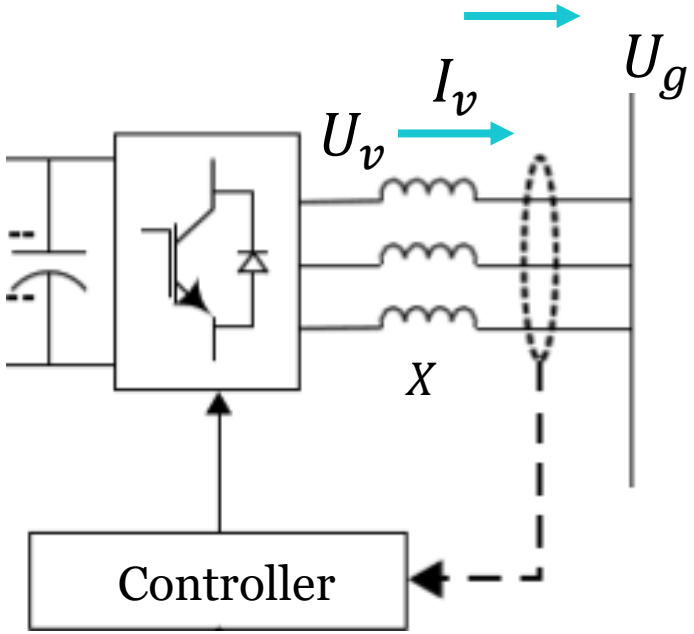

$$\bar{I}_v = \frac{U_v \angle \delta - U_g}{jX\sqrt{3}}$$

Note $\sqrt{3}$ in the denominator since the voltages are ph-ph

$$P_g + jQ_g = \sqrt{3} \cdot U_g \cdot \bar{I}_v^*$$

Controlling the amplitude, phase angle, and frequency of U_v controls the active and reactive power flow.

$$P_R = \frac{V_S V_R}{X} \sin\delta$$

$$Q_R = \frac{V_S V_R \cos\delta}{X} - \frac{V_R^2}{X}$$

PI controller

Current reference

Feedback

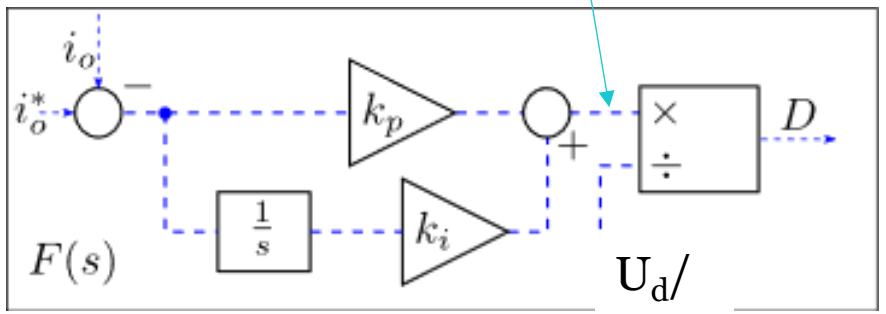

- Feedback control
- Zero steady-state error
- Most used

https://en.wikipedia.org/wiki/Proportional%E2%80%93integral%E2%80%93derivative_controller

Impracticalities of abc-frame control

PI controller performance for step change in $i_{v(ref)}$

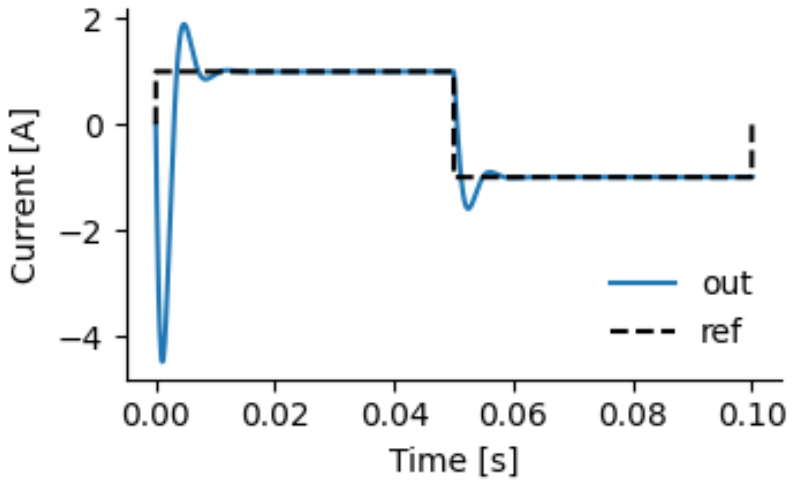

Zero steady state-error in step response.

PI controller performance for sinusoidal varying $i_{v(ref)}$

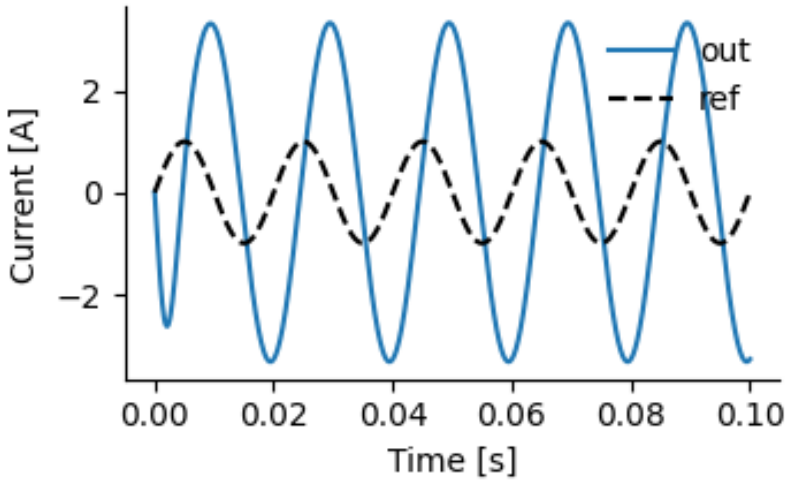

Controller gains have to be **very large** to track the reference without any phase-delay.

Three-phase voltages

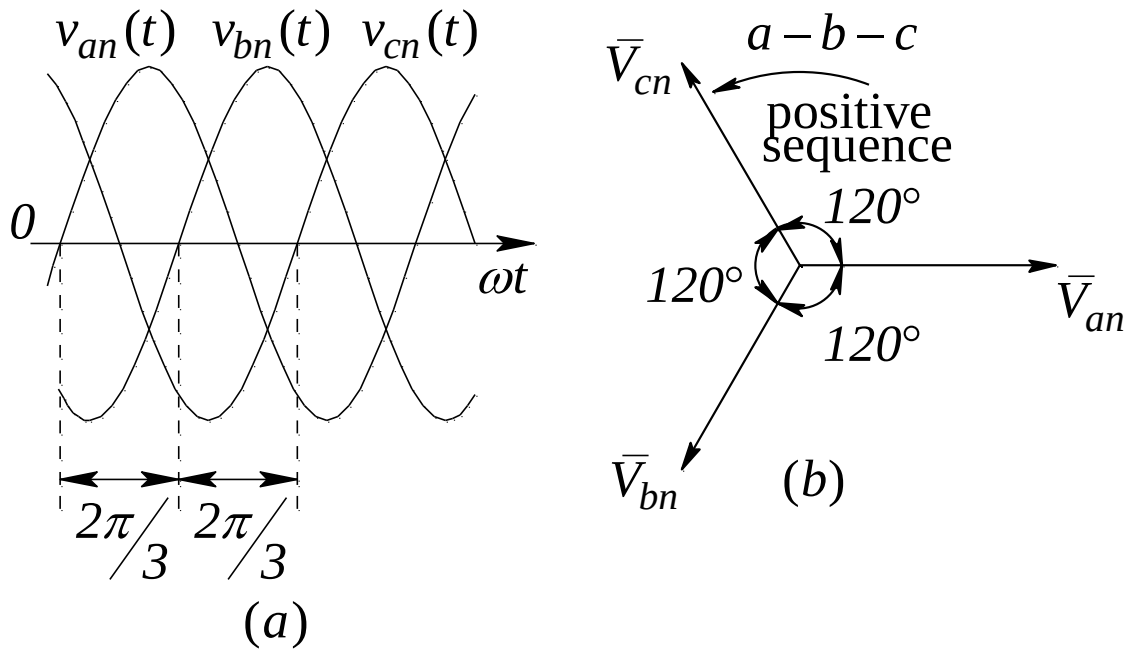

Fig. 2-11 Three-phase voltages in time and phasor domain.

$$v_{an} = \sqrt{2}V\cos(\omega t)$$
$$v_{bn} = \sqrt{2}V\cos(\omega t - 120°)$$
$$v_{cn} = \sqrt{2}V\cos(\omega t - 240°)$$

$$\bar{V}_{an} = V\angle 0°$$
$$\bar{V}_{bn} = V\angle -120°$$
$$\bar{V}_{cn} = V\angle -240°$$

V is the RMS phase to neutral voltage

Transformation 3-ph to 2-ph

$\alpha\beta 0$ (Clarke) transformation

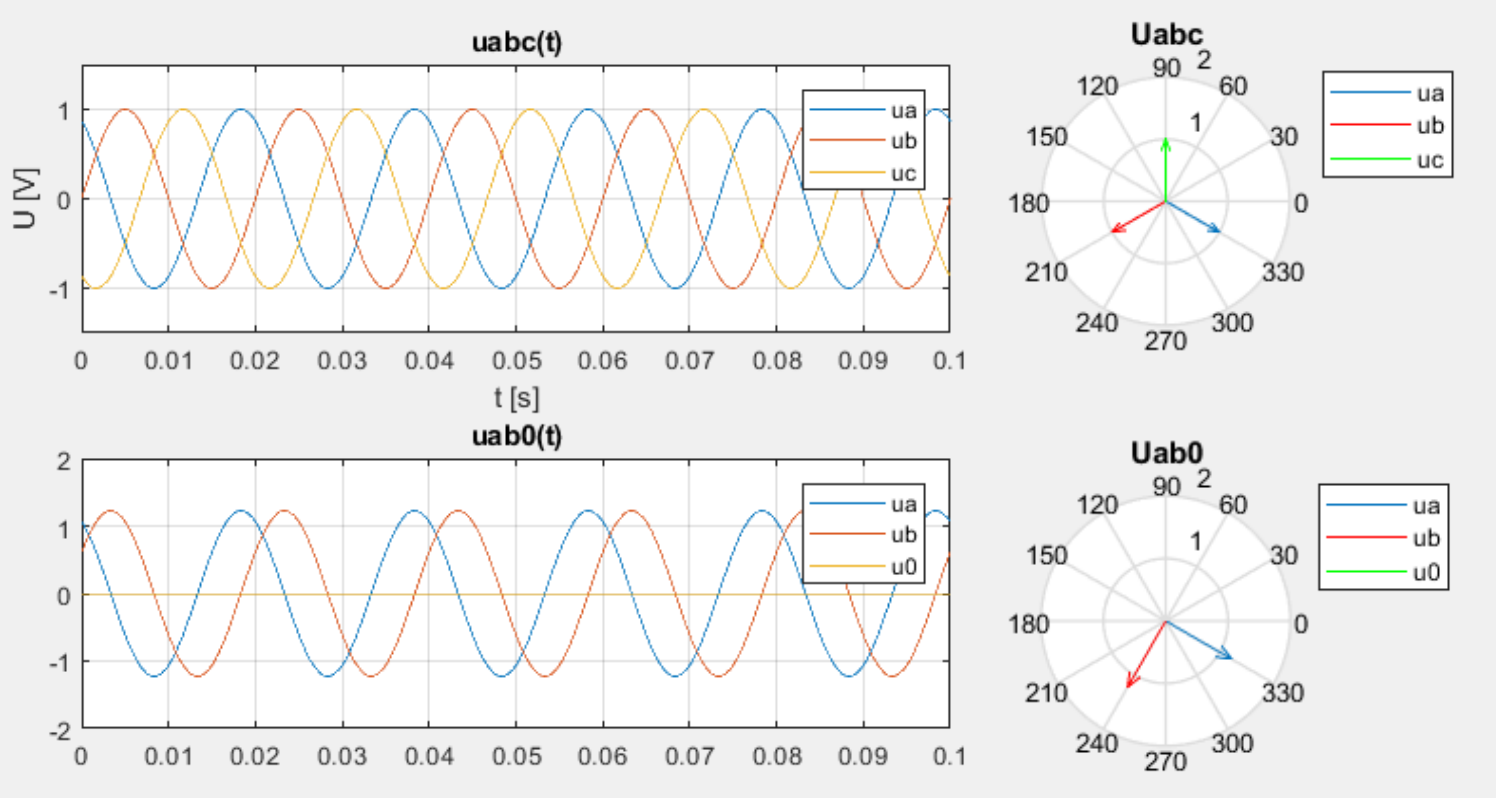

$$\begin{bmatrix} u_\alpha \\ u_\beta \\ u_0 \end{bmatrix} = \frac{2}{3} \begin{bmatrix} 1 & -\frac{1}{2} & -\frac{1}{2} \\ 0 & \frac{\sqrt{3}}{2} & -\frac{\sqrt{3}}{2} \\ \frac{1}{\sqrt{2}} & \frac{1}{\sqrt{2}} & \frac{1}{\sqrt{2}} \end{bmatrix} \begin{bmatrix} u_a \\ u_b \\ u_c \end{bmatrix}$$

Transformation 2-ph to DC

dq0 (Park) transformation

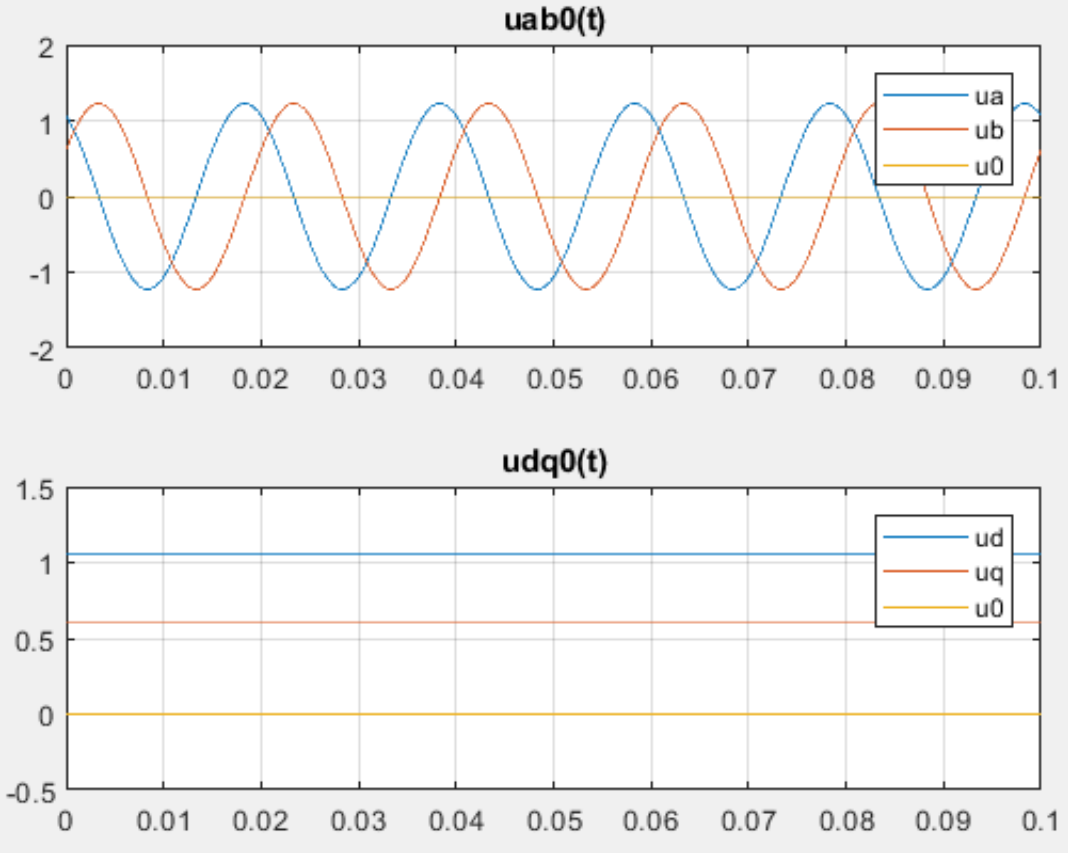

$$\begin{bmatrix} v_d \\ v_q \\ v_0 \end{bmatrix} = \begin{bmatrix} \cos(\theta) & \sin(\theta) & 0 \\ -\sin(\theta) & \cos(\theta) & 0 \\ 0 & 0 & 1 \end{bmatrix} \begin{bmatrix} v_\alpha \\ v_\beta \\ v_0 \end{bmatrix}$$

Synchronization is needed, θ from the PLL

Vector transformations

- Clarke transformation

$$\begin{bmatrix} v_\alpha \\ v_\beta \end{bmatrix} = \frac{2}{3} K \begin{bmatrix} 1 & -1/2 & -1/2 \\ 0 & \frac{\sqrt{3}}{2} & -\frac{\sqrt{3}}{2} \end{bmatrix} \begin{bmatrix} v_a \\ v_b \\ v_c \end{bmatrix}$$

$K = 1$, peak scaling.
$K = 1/\sqrt{2}$, RMS scaling.
$K = \sqrt{3/2}$, power scaling/line-line scaling.

- Park transformation

$$\begin{bmatrix} v_d \\ v_q \end{bmatrix} = \begin{bmatrix} \cos\theta & \sin\theta \\ -\sin\theta & \cos\theta \end{bmatrix} \begin{bmatrix} v_\alpha \\ v_\beta \end{bmatrix}$$

where, θ is the angular velocity

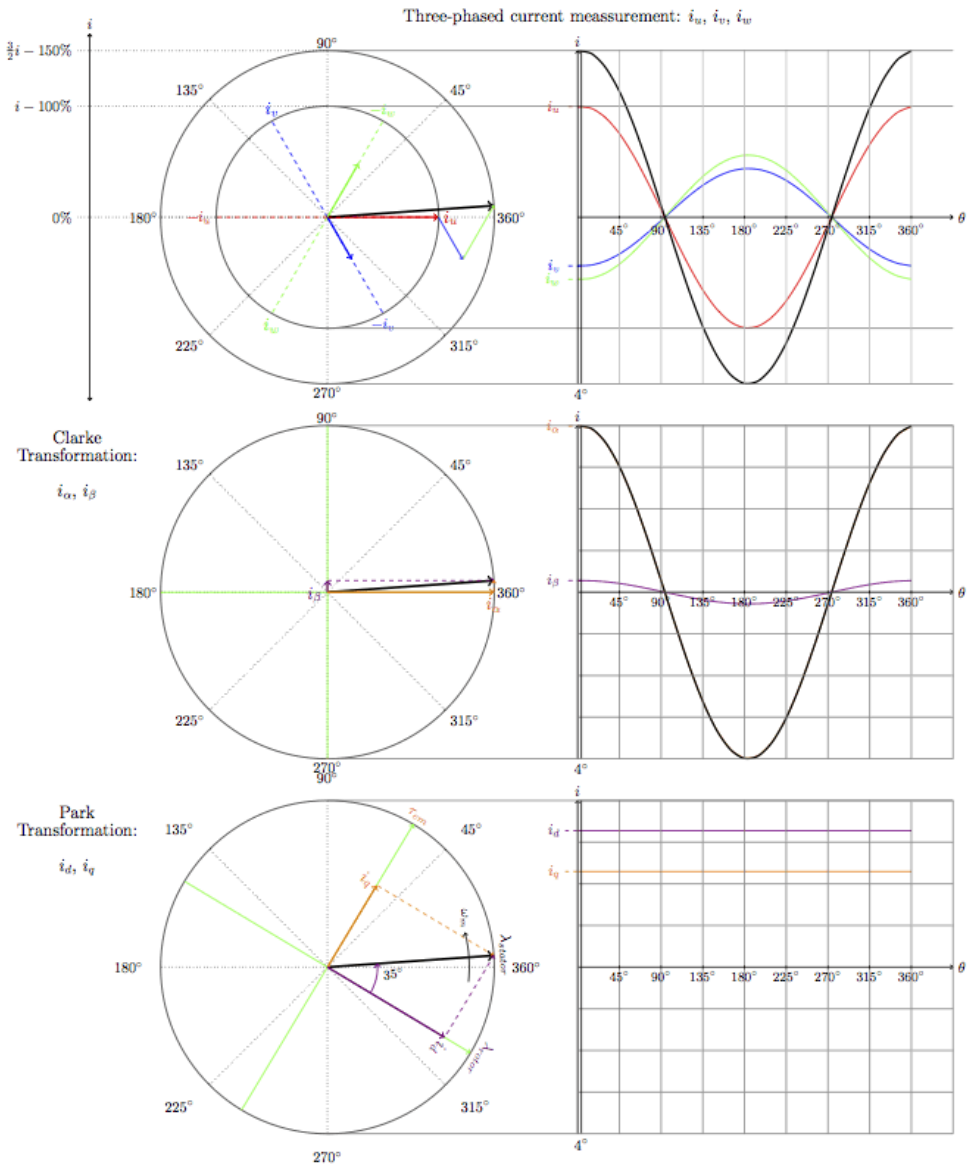

PLL and coordinate transform of grid voltage and current

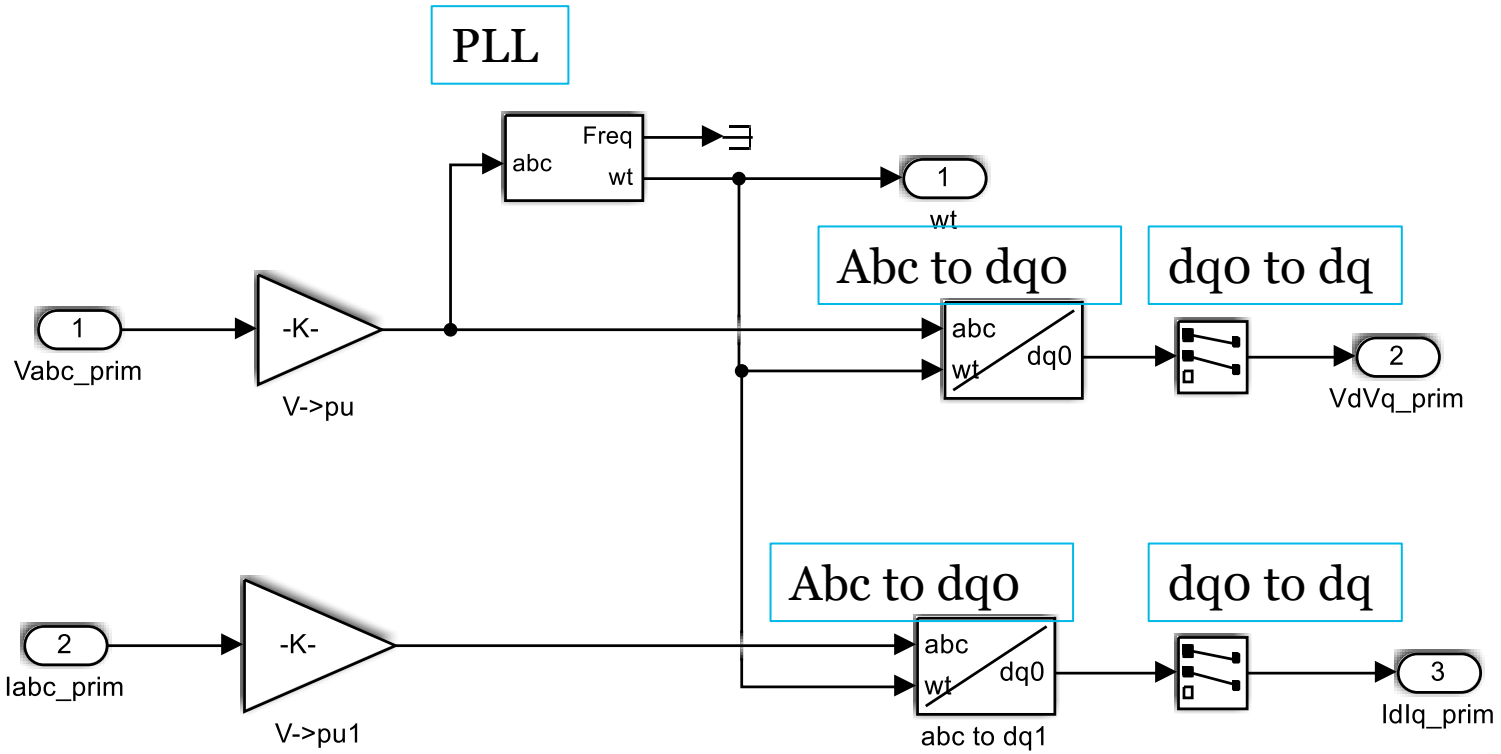

PLL to define DQ-frame - 3 bus network

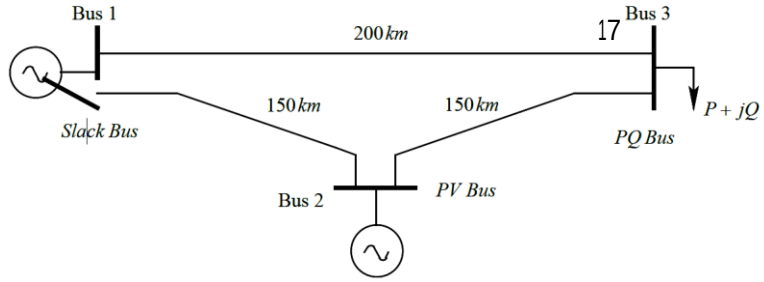

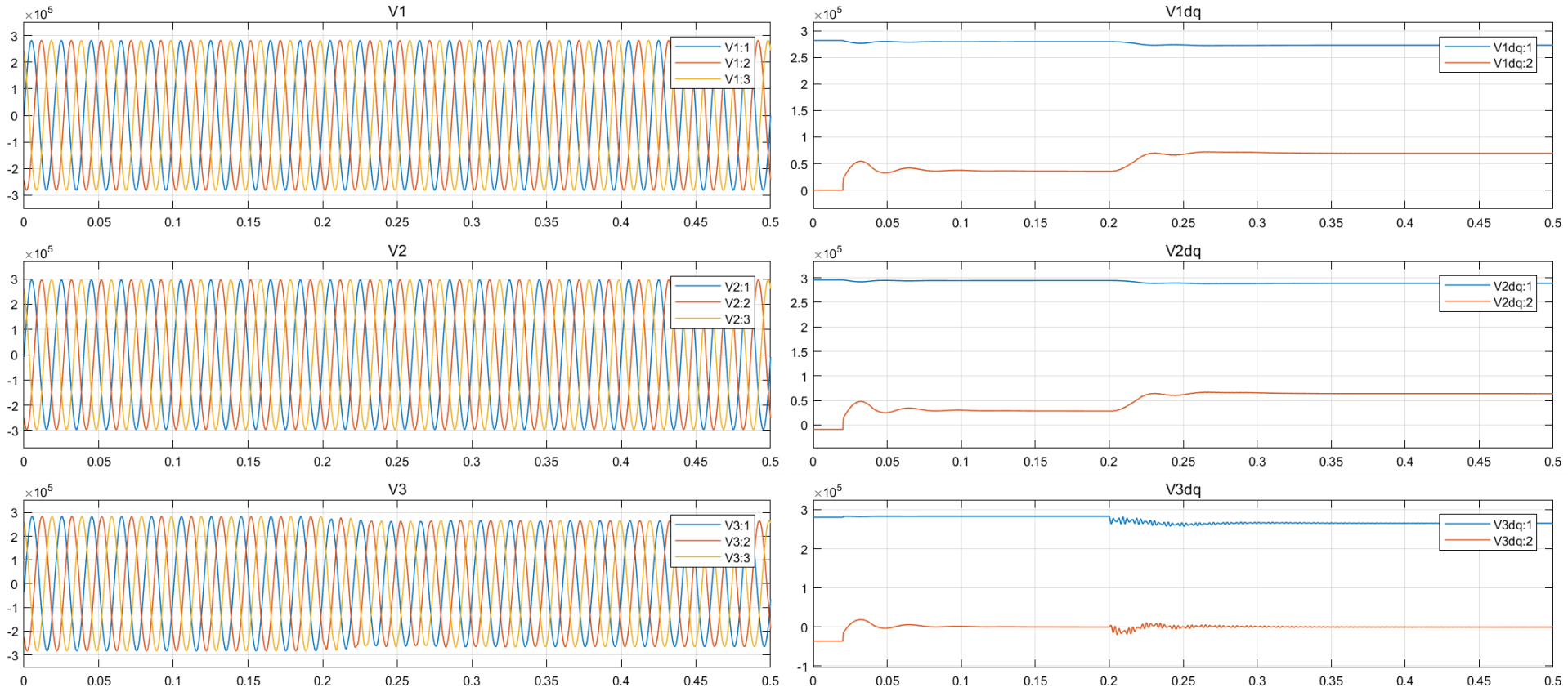

PLL synchronized to V3

More details in the Tutorial/Lesson 5

Outline

- Phase Locked Loop ☑
- Coordinate transforms ☑
    - abc-frame
    - αβ-frame
    - DQ-frame
- Vector control
- PV with MPPT + Grid inverter

Power Flow Control – VSC (dq0 frame)

$$P_g + jQ_g = 3 \cdot u_g \cdot i_v$$

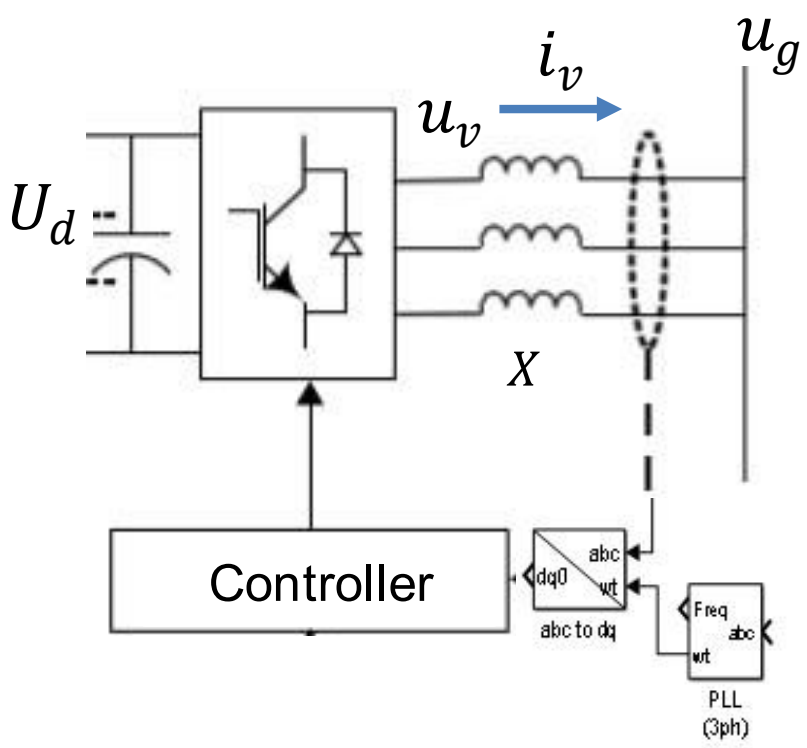

- u_v is controlled to achieve $i_v = i_{vRef}$
- u_g and i_v are measured

$$\bar{U}_{vDQref} = \bar{U}_{gDQ} + j\omega L\bar{I}_{vDQ}$$

- Individual phase control not needed
- PI-control possible due to dc reference
- $i_{vRef} = \hat{I}_{vDRef} + \mathrm{j}\,\hat{I}_{vQRef}$
- P_g and Q_g independently controlled through I_{vd} and I_{vq}

Vector control

- $P_g + jQ_g = \sqrt{3} \cdot U_g \cdot I_v^*$, the idea is the same, but d and q vectors are used.
- Control current in DQ-frame: I_{vd}, I_{vq}, i.e., I_v is controlled
- Based on grid voltage: U_{gd}, U_{gq}, i.e., i.e., U_g
- PLL synchronized to U_g makes $U_{gq} = 0$, i.e., U_g becomes reference.
- $P_g + jQ_g = \frac{3}{2}\left(U_{gd} + jU_{gq}\right) \cdot conj\left(I_{vd} + jI_{vq}\right)$

$$= \frac{3}{2}\, U_{gd}\left(I_{vd} - jI_{vq}\right) = \underbrace{\frac{3}{2}\, U_{gd} I_{vd}}_{\text{Active power}} + \underbrace{\frac{3}{2} U_{gd} I_{vq}}_{\text{Reactive power}}$$

$$P_g + jQ_g = 3 \cdot u_g \cdot i_v$$

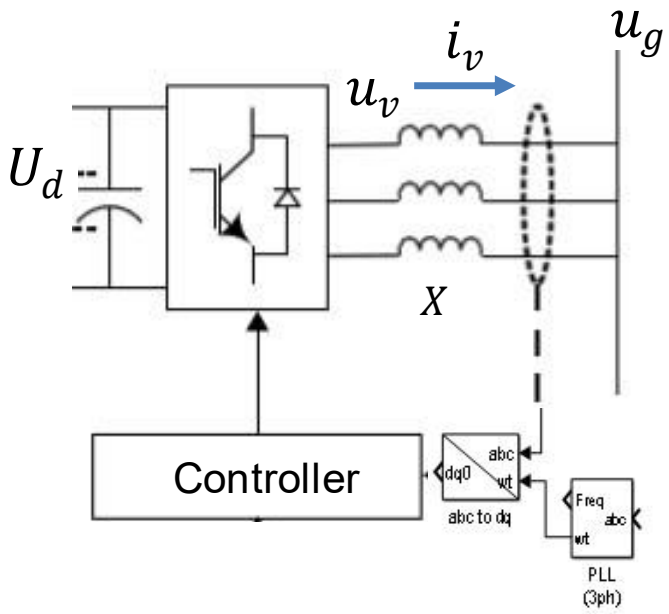

Vector control

- To control I_{vd} & I_{vq}, U_{vq}& U_{vq} are used as “control knobs”.
- $\bar{U}_v = \bar{U}_g + j\omega L\bar{I}_v$ (Note: $\bar{U}_v$ and $\bar{U}_g$ are ph-gnd/neutral voltages)
- $\bar{I}_{vdq}$, transform from abc to dq
- $\bar{U}_{vdq(ref)} = \bar{U}_{gdq} + j\omega L\bar{I}_{vdq(ref)} + \underbrace{k\left(\bar{I}_{vdq} - \bar{I}_{vdq(ref)}\right)}_{proportional\ control}$
- PLL (Phase Locked Loop) required to define ωt

$$P_g + jQ_g = 3 \cdot u_g \cdot i_v$$

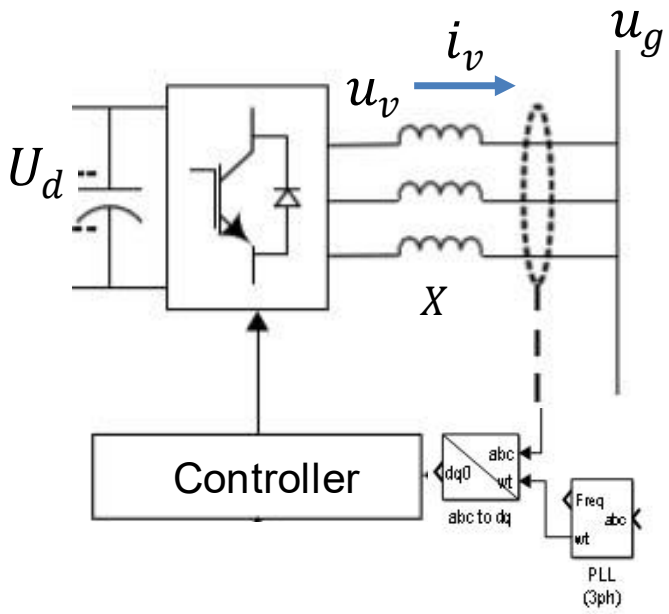

Vector control

$$P_g + jQ_g = \frac{3}{2} u_g \cdot i_v$$

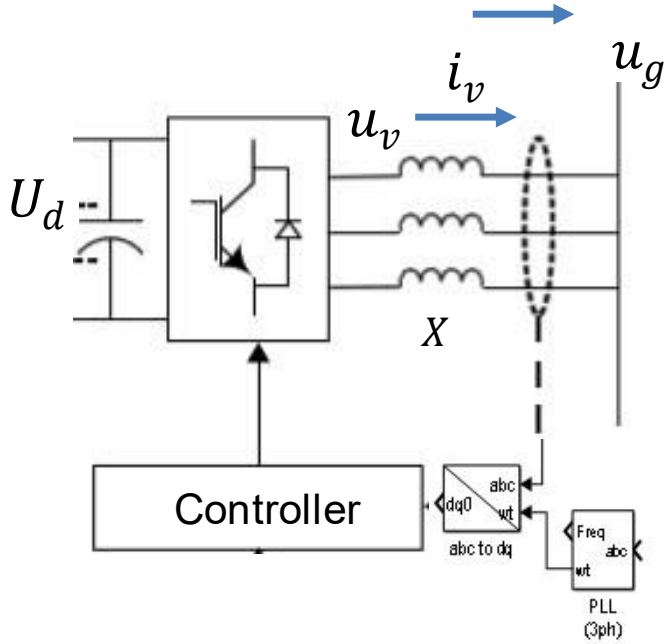

- $\bar{U}_{vdq(ref)} = \bar{U}_{gdq} + j\omega L\bar{I}_{vdq(ref)} + \underbrace{k\left(\bar{I}_{vdq} - \bar{I}_{vdq(ref)}\right)}_{proportional\ control}$
- $U_{vd(ref)} + jU_{vq(ref)} = U_{gd} + jU_{gq} + j\omega LI_{vd(ref)} - \omega LI_{vq(ref)} + \underbrace{k\left(I_{vd} + jI_{vq} - I_{vd(ref)} - jI_{vq(ref)}\right)}_{proportional\ control}$
- $U_{vd(ref)} = U_{gd} - \boxed{\text{Cross coupling}\ \underbrace{\omega LI_{vq(ref)}}_{feed-forward}} + \underbrace{k\left(I_{vd} - I_{vd(ref)}\right)}_{proportional\ control}$
- $U_{vq(ref)} = U_{gq} + \boxed{\underbrace{\omega LI_{vd(ref)}}_{feed-forward}} + \underbrace{k\left(I_{vq} - I_{vq(ref)}\right)}_{proportional\ control}$

For $I_{vq} = 0$, does not mean $U_{vq} = 0$, even though $U_{gq} = 0$, i.e., synchronized to U_g.

Vector control: block diagram

Converter “does not understand” U_{dq} the converter reference should be U_{abc}

Id positive --> The converter generates active power ("Inverter mode") = Active Power P positive
Iq positive --> The converter absorbs reactive power ("Inductive mode") = Reactive Power Q negative

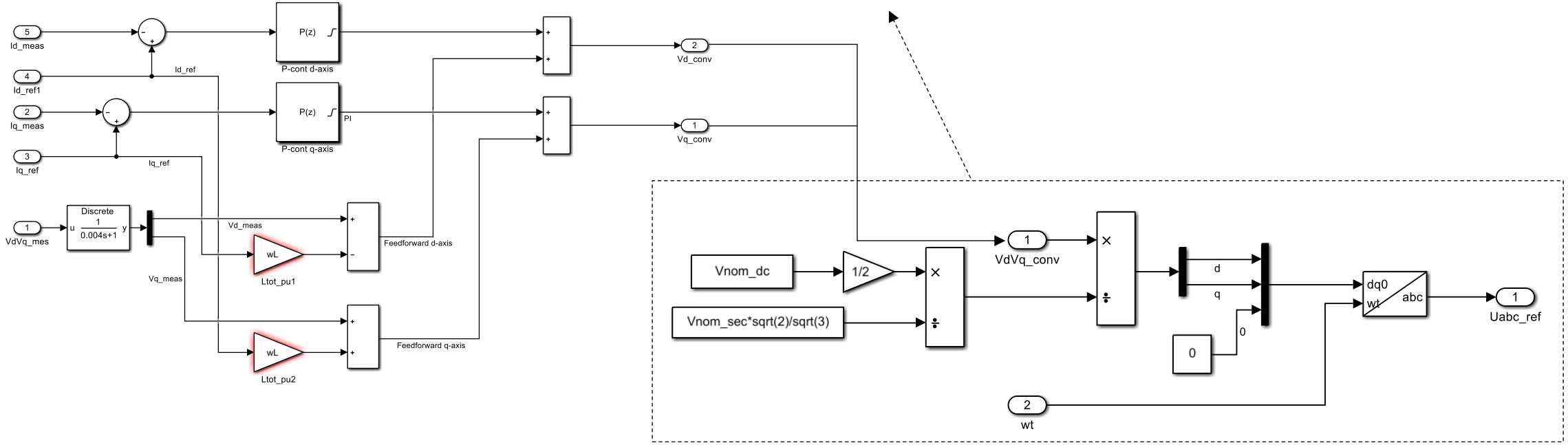

Vector control: VSC side

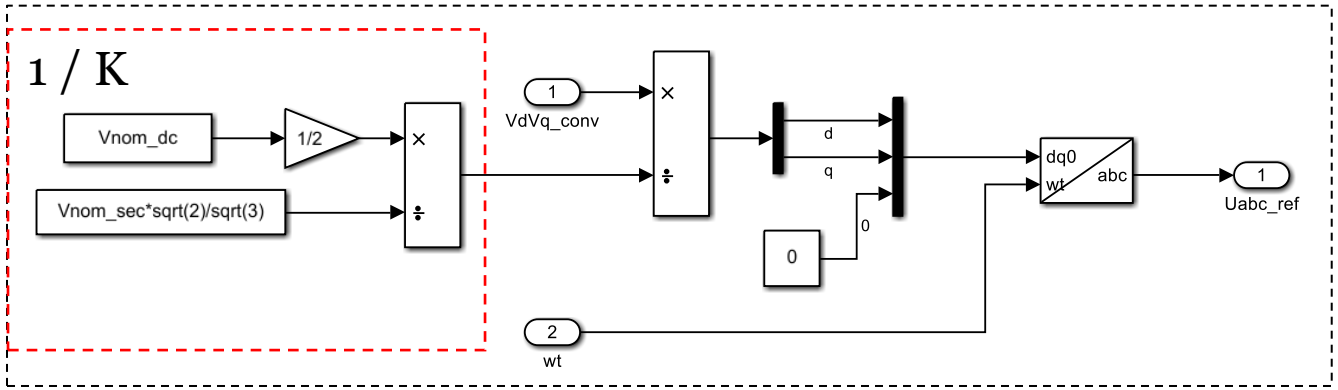

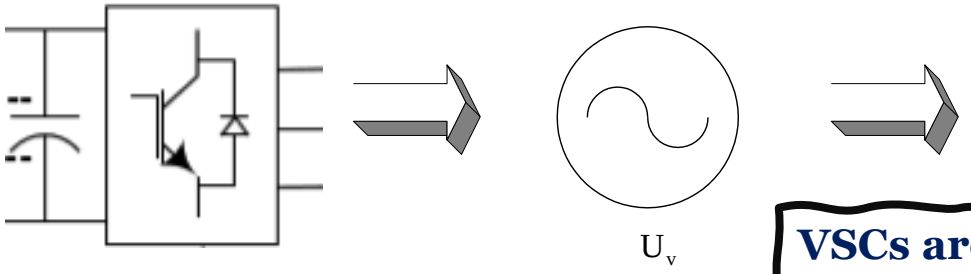

abc-frame **adjustable** { amplitude, phase angle, frequency

VSCs are modelled as ideal AC voltage sources with a gain (K) and controllable amplitude, phase angle, and frequency

DC to AC converter (inverter) gain

$$U_v = \sqrt{\frac{3}{2}} \cdot m_a \frac{U_d}{2}$$

$$m_a = \frac{U_v \sqrt{\frac{2}{3}}}{\frac{U_d}{2}}$$

U_d, is given and U_v is the converter output, controlled through m_a.
Amplitude of the converter reference and is typically between **0 to 1.** i.e., $\boldsymbol{U_{abc(ref)}}$ amplitude is m_a.

Outline

- Phase Locked Loop ☑
- Coordinate transforms ☑
  - abc-frame
  - αβ-frame
  - DQ-frame
- Vector control ☑
- PV with MPPT + Grid inverter

PV-system MPPT for grid infeed

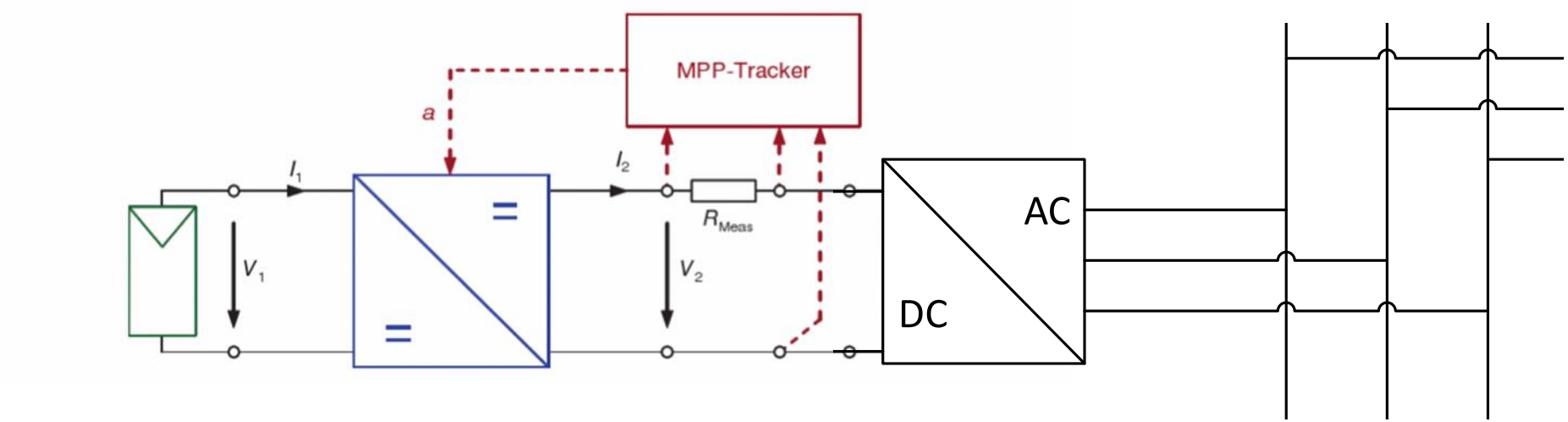

- DC/DC conversion
  - to increase voltage from PV to inverter
  - to optimize PV-panel voltage, V1, for maximum power

- DC/AC inverter for grid connection
  - Reactive power grid support
  - DC voltage V2 control

Cascaded control

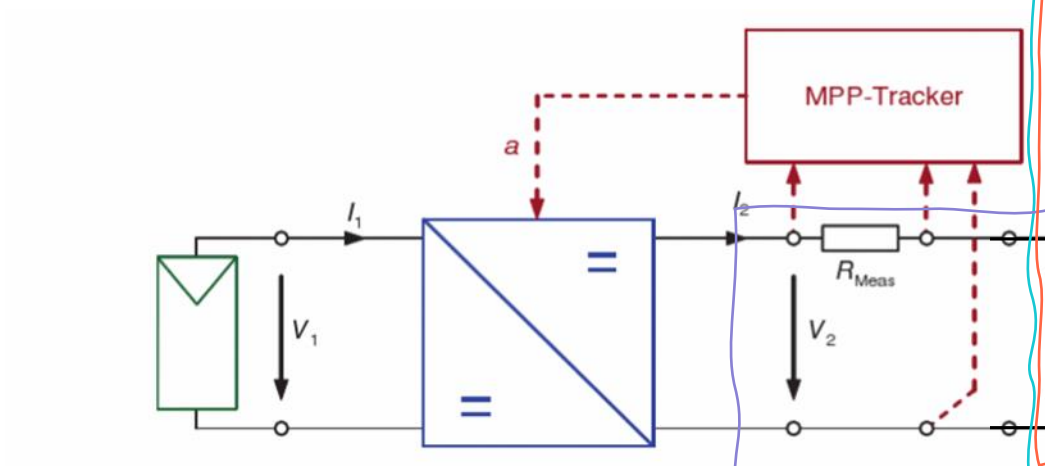

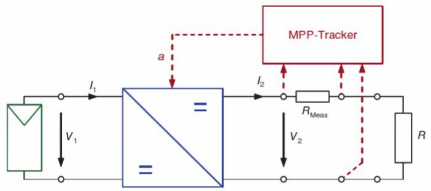

Figure 7.6 Principle of MPP tracking: The output power is maximized by measuring the current and voltage with the simultaneous variation of the duty factor

MPPT controller

Inverter Controller

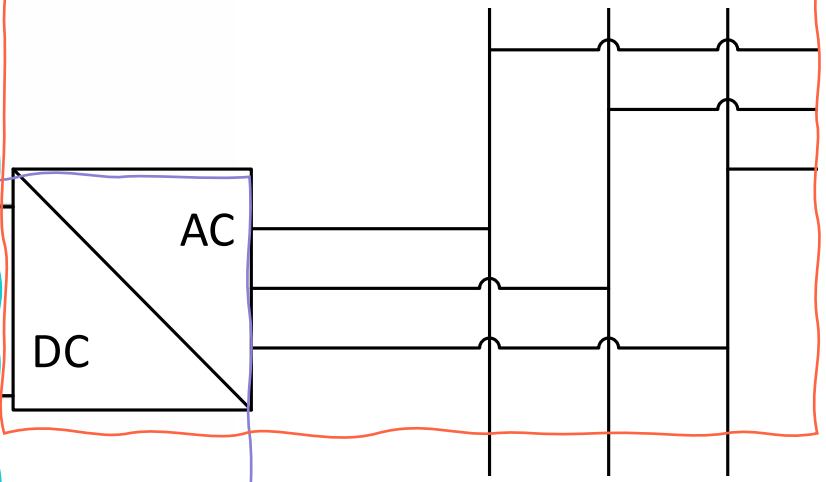

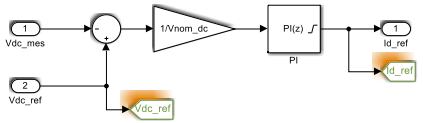

DC–link controller

Cascaded control

MPPT controller

ref-def

DC-link controller

ref-def

Inverter controller

ref-def: defines the reference for the next control stage.

Inverter Control

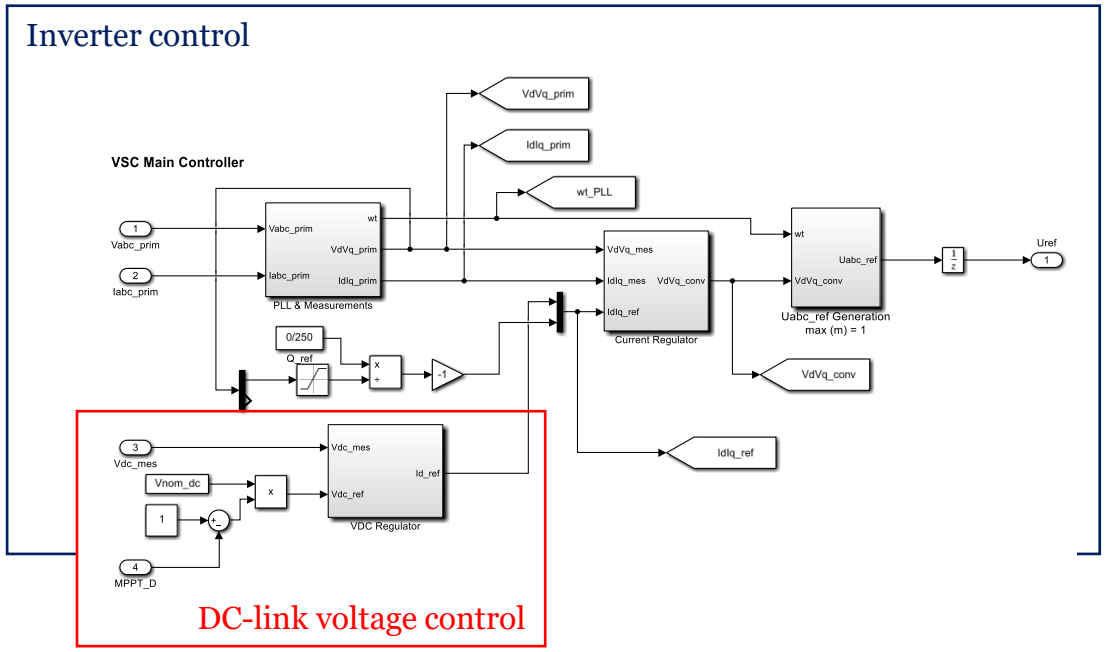

Power control: (same as before)

$$P_g + jQ_g = \frac{3}{2}\left(U_{gd} + jU_{gq}\right) \cdot conj\left(I_{vd} + jI_{vq}\right)$$

$$= \frac{3}{2}\, U_{gd}\left(I_{vd} - jI_{vq}\right)$$

Achieved by control U_v by changing m_a.

$$m_a = \frac{U_v\sqrt{\frac{2}{3}}}{\frac{U_d}{2}}$$

U_d: should be controlled to a set-value.

DC-link voltage control

Block Diagram

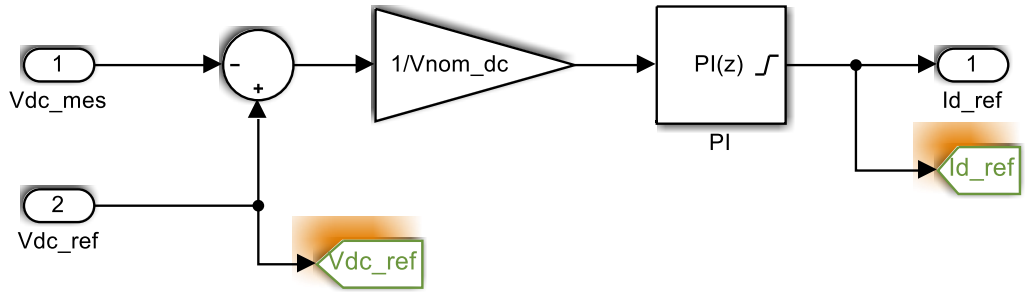

- Active power flow defined by I_{vd} and the setpoint $I_{vd(ref)}$ is given by the DC-link control.
- Simple PI controller

MPPT, Maximum Power Point Tracking

- DC/DC converter to allow different pv- and load voltage
- PV-voltage is optimized to reach MPP

Defines the DC voltage set-point $U_{dc(ref)}$ to the DC-link controller

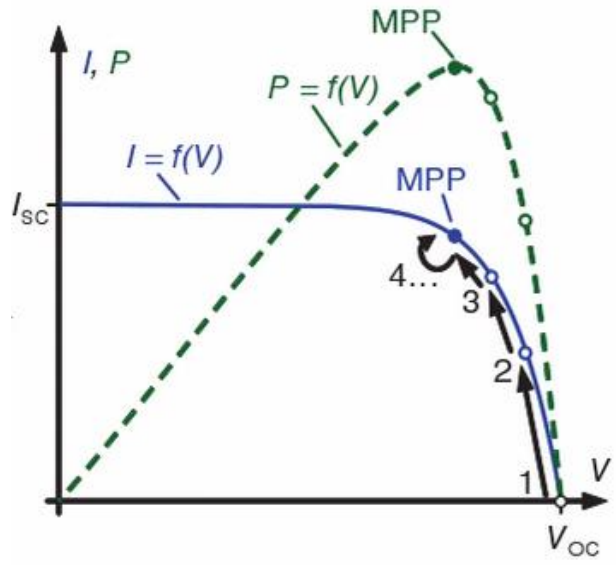

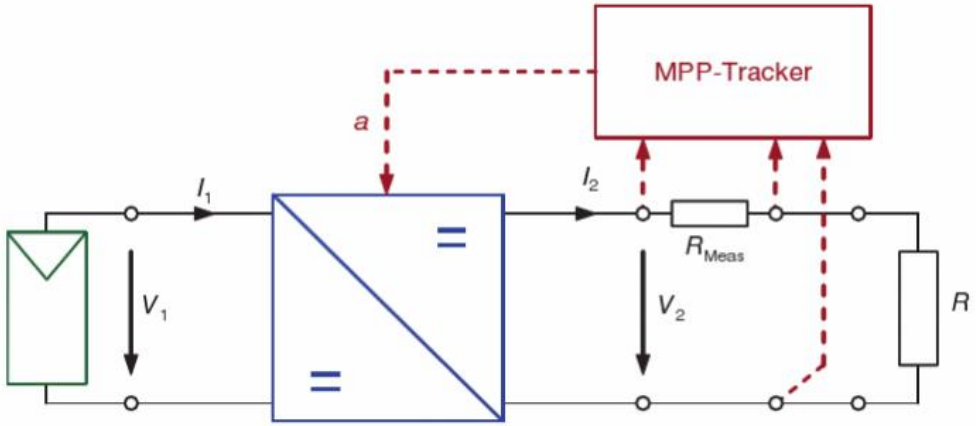

Figure 7.6 Principle of MPP tracking: The output power is maximized by measuring the current and voltage with the simultaneous variation of the duty factor

Cascaded control

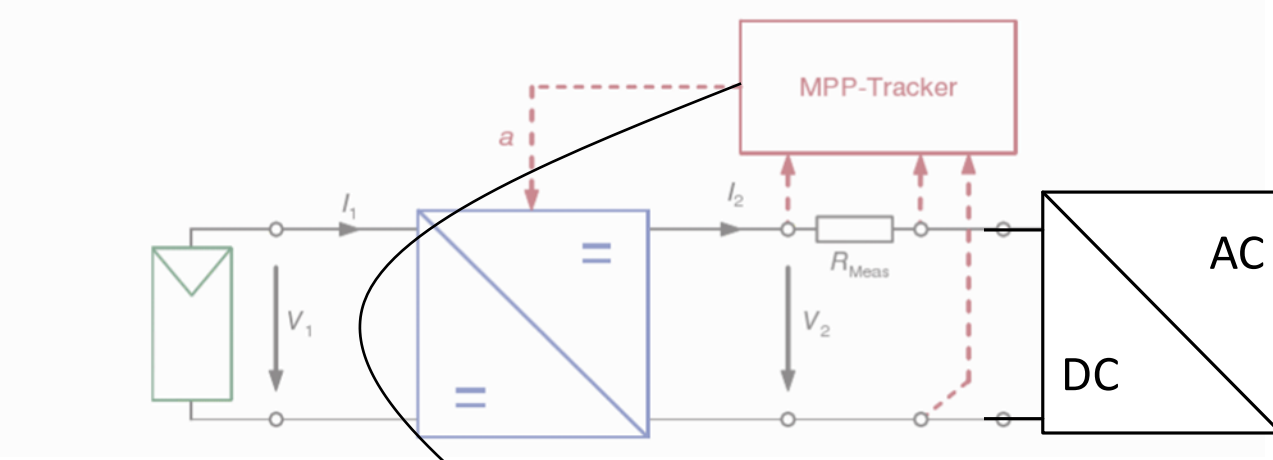

$$U_{dc(ref)} \longrightarrow I_{vd(ref)}$$

$$m_a = \frac{U_v\sqrt{\frac{2}{3}}}{\frac{U_d}{2}} \longrightarrow P_g + jQ_g = \frac{3}{2}\,U_{gd}\left(I_{vd} - jI_{vq}\right)$$

Outline

- Phase Locked Loop ☑
- Coordinate transforms ☑
  - abc-frame
  - αβ-frame
  - DQ-frame
- Vector control ☑
- PV with MPPT + Grid inverter ☑